Nuevas Técnicas de Dispersión, S.L.

Pol. Ind. La Esperanza, C/Comunidad de Murcia, 152
12400 Segorbe (Castellón) España
Tel. +34 964714032 - info@ntdmaquinaria.com
www.ntdmaquinaria.com

UV drying tunel for laboratory

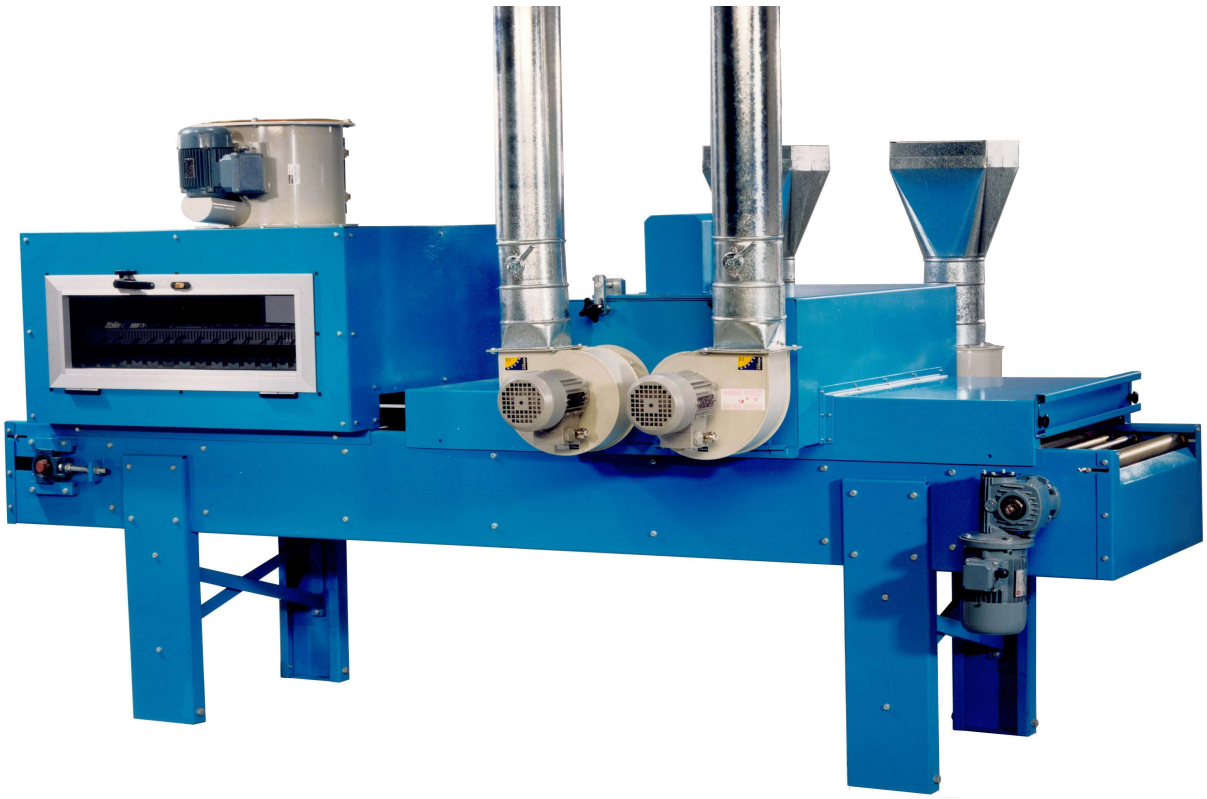

QUIS UV 65/120 G100 - T/VE - 0 - 3T

NTD has included some improvements in the design of UV
drying equipments for better protection and longer operational life of lamps. Therefore, we also increase safety conditions and production capacity and reduce energy consumption. Besides, maintenance is very simple.

NTD products are unique in markets as user can adjust powers depending on their necessities. This is possible by means of a 4 position variator which allows a range of operation from 0,80, 100 and 120 W/Cm and also allows a variation at half power between 50-55-60 W/Cm. Unique versatility, impossible to find in markets, is only offered by NTD.

Quis UV 65/120 g 100 has been especially designed for its use inlaboratories. Our equipment includes a timing system and a program which simulates evaporation, gelation and drying processes of industrial installations, controlling all possible variables.

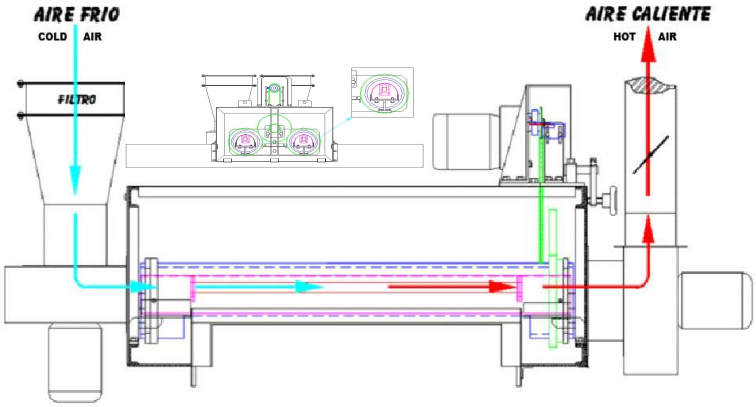

NTD VENTILATION SYSTEM

NTD ventilation system avoids particles accumulation on lamps quartz surface as lamps reach 900ºC during operation and particles on surface can produce damages and shorten lamps life.

Ventilation system consists of two ventilators (impulsion and extraction) and a filtering air system. Air flow produces a curtain which circulates around the lamp through conductions providing some advantages:
- Avoid particles accumulation on lamps surface.
- Better cooling system for lamps and caps than others in markets and therefore, longer operational life.

In addition, once irregularities are solved, self covering system is disabled and a built in electrical system brings back maximum power radiation programmed, automatically. This system allows saving time as you do not need to start up lamps again.

All high pressure UV lamps emit an oxidant gas: Ozone. NTD ventilation system minimizes this gas action by means of an air curtain which cools lamps and expels Ozone through condutions.

EASIER MAINTENANCE

Lamp-reflector set is an independent unit installed on moveable guides which eases a quick and simple extraction. Air curtain produced by ventilation system avoids particles accumulation on lamps surface so that periods between maintenance works are longer.

BETTER SECURITY SYSTEM

During an emergency stop (transfer stops) the unit radiates at 1/2 power automatically and self-covering system is activated. NTD has developed a covering system which works separately from holding structure of lamps. This way the outer cover turns hiding the radiation while lamps remain stopped. Therefore, lamps are free of mechanical hits or torsions (caps are the weakest point).

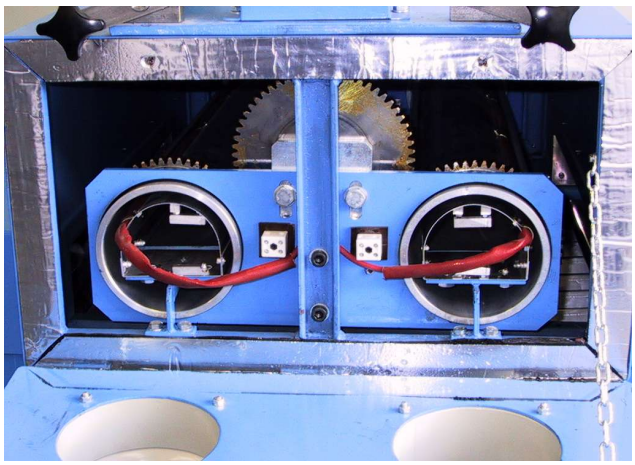

COVERING SYSTEM

TRADITIONAL SYSTEM

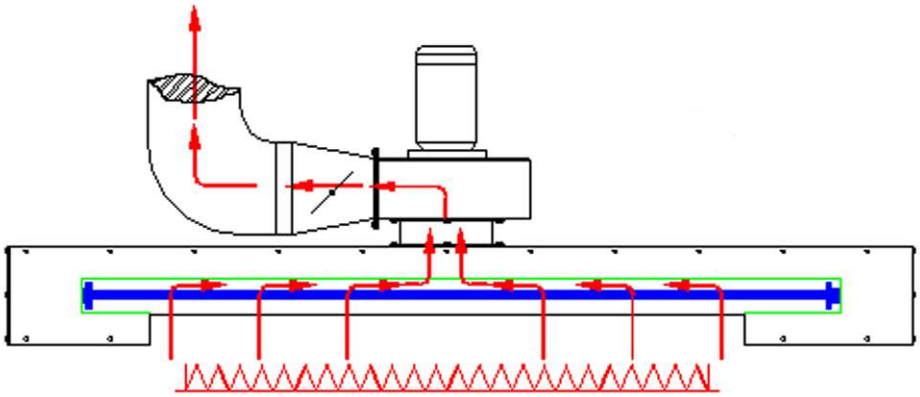

QUICKER START

When lamps start up, they connect to timers and when a pre-establishd time has been reached ventilators start up, allowing a quicker start.

LESS CONSUMPTION

Thanks to a group of condensers working at a low tension (380V), the reactive current is absorbed and this allows a 30% energy saving. The lamp start up is slow with no peaks in terms of current, what means a better protection of the lamps.

MORE VERSATILE

NTD equipment is designed considering furture enlargements, modifications or improvements on system or the electrical operation.

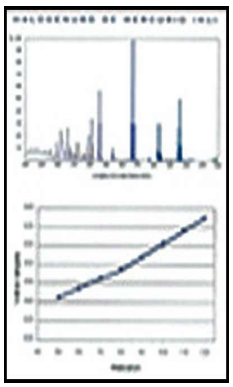

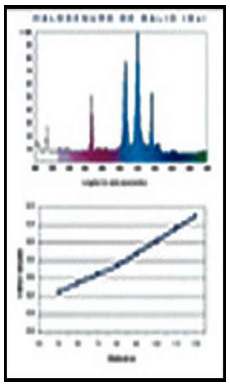

The traditional system creates an air flow suctioned that goes through the lamps that get dirty the environmental dust.

The lack of a correct ventilation produces high temperatures in terminals and connections. This can cause the ends to break.

The maintenance of the machine is extremely complicated as screens are closed and difficult to access.

Traditional units do not have any security control device, so they are not protected against overtension and are usually blown. That means a change of the lamps is required causing extra expenses and production losses.

During an emergency stop, lamps continue radiating at full power, so pieces exposed to radiation can be damaged.

In the event that the emergency stop switches off the lamps, you will have to wait all the start up process, causing delay in the production.

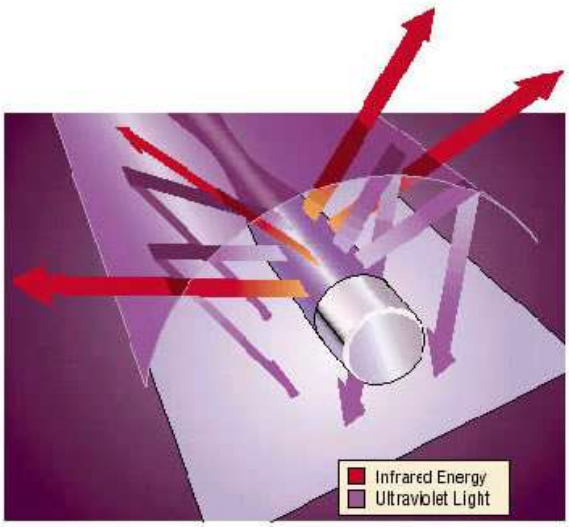

Control and electrical panel

Switches for adjusting the power emitted by the lamps

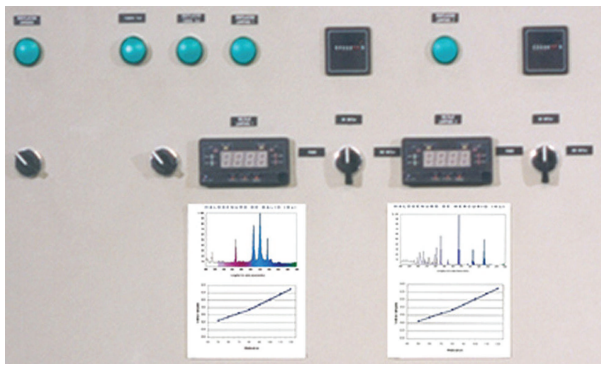

Wavelenght diagram in nanometers

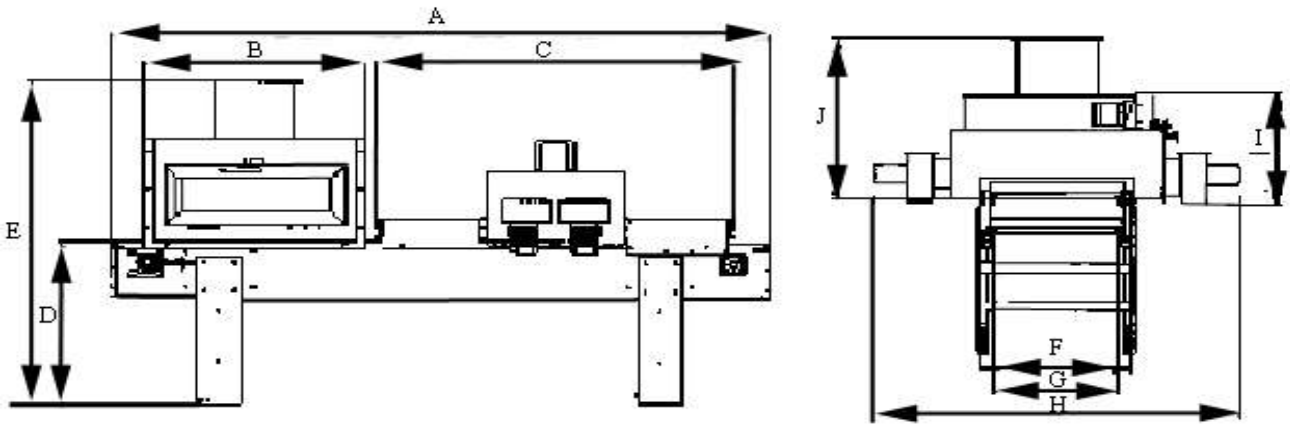

TECHNICAL DATA

TECHNICAL DATA	G100 – T/VE-0-3T
No. of UV high pressure lamps	2
High pressure lamps power	7800X2W
No. of UV gelation lamps	18
Gelation lamps power	18x40W
Ventilation system	NTD SYSTEM
Voltage controllers	2
Covering system	YES
Timers	3
Conveyor with adjustable speed	YES
Operation voltage	THREE-PHASE 380v
Protection rate	IP55

MEASUREMENTS

LETTER	DIMENSION	UNITS (approx.)
A	MACHINE LENGHT	3000 mm
B	GELATION TUNNEL LENGTH	1005 mm
C	HIGH PRESSURE UV TUNNEL LENGTH	1630 mm
D	MAX. PASSAGE HEIGHT	95 mm
E	MAX. MACHINE HEIGHT	1705 mm
F	MAX. RADIATING WIDTH IN TUNNEL	650 mm
G	MAX. PIECE WIDTH IN TUNNEL	600 mm
H	MAX. MACHINE WIDTH	1665 mm
I	MAX. HIGH PRESSURE UV TUNNEL HEIGHT	580 mm
J	MAX. GELATION HEIGHT	850 mm